DCD3

Higher-Lumen Fixed Downlight

New Construction, Remodel
4" Aperture, 0-10V

Project:	Type:
Product Code:	Date:

V101522

Flexibility Radically simplifies configuration in the field

Modularity Wide range of interoperable lighting options including lumen, color temperature, and beam angle

Performance Efficiently produces up to 3000 lm of superior lighting at 90+ CRI

Ease Connect the power and driver with a simple snap, no tools required

OPTICAL

Delivered Lumens (Power)

1500 lm (20W), 2000 lm (28W), 2500 lm (37W), 3000 lm (40W)

Color Quality

90+ CRI, 2-step SDCM

Color Temperature

2700K 3000K
3500K 4000K

Beam Spread

Narrow Spot (15°)
Spot (25°)
Flood (40°)
Wide Flood (60°)

PHYSICAL

Application

New Construction, Remodel

Aperture

4" Commercial

Ceiling Thickness

½" up to 1¾"

TRIMS

Style

Round Beveled, Hyperbolic, Pinhole, Low Profile, Wall Wash, Decorative, Flangeless

Finish

White, Black, Clear Diffuse, Warm Diffuse, Black w/ White Flange, Clear Diffuse w/ White Flange, Warm Diffuse w/ White Flange, Custom

ELECTRICAL & CONTROLS

Input Voltage

120/277V

1% Dimming

0-10V 1%

RATINGS

Module

UL Listed for Wet Location

DMF LIGHTING 1118 E. 223rd St. Carson, CA 90745 323.934.7779 info@dmflighting.com dmflighting.com

© 2022 DMF Lighting. All Rights Reserved. Specifications subject to change without notice. See website for U.S. and international patent information.

PRODUCT BUILDER - 0-10V

HOUSING

PRODUCT CODE		APPLICATION		SHAPE		APERTURE	
DCDH	DCD Housing	N	New Construction	R	Round	4	4" Aperture
		R	Remodel				

MODULE

PRODUCT CODE		LUMENS		CRI		CCT		BEAM SPREAD	
DCD3M	Fixed Module	15	1500 lm	9	90+ CRI	27	2700K	NS	Narrow Spot (15°)
		20	2000 lm			30	3000K	SP	Spot (25°)
		25	2500 lm			35	3500K	FL	Flood (40°)
		30	3000 lm			40	4000K	WF	Wide Flood (60°)

TRIM

PRODUCT CODE		SHAPE		APERTURE		STYLE		FINISH		OPTION	
DCD3T	DCD3 Trim	R	Round	4	4" Aperture	S	Beveled	WH	White	[Blank]	None
						H	Hyperbolic [1]	BK	Black	DOF	Decorative: Open, Frosted [1,5]
						P	Pinhole [1,2]	CD	Clear Diffuse	FL	Flangeless [1,6]
						L	Low Profile [1,3]	WD	Warm Diffuse		
						W	Wall Wash [4]	BW	Black w/ White Flange		
								CW	Clear Diffuse w/ White Flange		
								WW	Warm Diffuse w/ White Flange		
								CC	Custom Color		

DCDHX-MUD-FL	Flangeless Mud Plate *(Required with Flangeless Trim)*

[1] Only available in White or Custom Color finish
[2] Only available in 1500 lm or 2000 lm
[3] Not available in Flangeless
[4] Requires Wide Flood optics
[5] Only available in Beveled style
[6] Requires DCDHX-MUD-FL Mud Plate

ADDITIONAL ACCESSORIES

DCD3X-NS	Narrow Spot Lens	DCD3X-FL	Flood Lens
DCD3X-SP	Spot Lens	DCD3X-WF	Wide Flood Lens

DMF LIGHTING 1118 E. 223rd St. Carson, CA 90745 323.934.7779 info@dmflighting.com dmflighting.com
© 2022 DMF Lighting. All Rights Reserved. Specifications subject to change without notice. See website for U.S. and international patent information.

PRODUCT BUILDER - EcoSystem Dimming or Emergency Lighting

HOUSING

PRODUCT CODE		APPLICATION		SHAPE		APERTURE		LUMENS		DRIVER		OPTION		INPUT	
DCDH	DCD Housing	N	New Construction	R	Round	4	4" Aperture	15	1500 lm	O	0-10V [1]	[Blank]	None	[Blank]	120V
		R	Remodel					20	2000 lm	C	Lutron LDE1[2]	EM	EM[3], Integrated Test Switch	2	277V
								25	2500 lm			EMS	EM[3], Remote Test Switch		
								30	3000 lm						

MODULE

PRODUCT CODE		LUMENS		CRI		CCT		BEAM SPREAD		DRIVER	
DCD3M	Fixed Module	15	1500 lm	9	90+ CRI	27	2700K	NS	Narrow Spot (15°)	A	Alternate
		20	2000 lm			30	3000K	SP	Spot (25°)		
		25	2500 lm			35	3500K	FL	Flood (40°)		
		30	3000 lm			40	4000K	WF	Wide Flood (60°)		

TRIM

PRODUCT CODE		SHAPE		APERTURE		STYLE		FINISH		OPTION	
DCD3T	DCD3 Trim	R	Round	4	4" Aperture	S	Beveled	WH	White	[Blank]	None
						H	Hyperbolic [4]	BK	Black	DOF	Decorative: Open, Frosted [4,8]
						P	Pinhole [4,5]	CD	Clear Diffuse	FL	Flangeless [4,9]
						L	Low Profile [4,6]	WD	Warm Diffuse	EM	Emergency w/ Integrated Test Switch [1,4,8]
						W	Wall Wash [7]	BW	Black w/ White Flange		
								CW	Clear Diffuse w/ White Flange		
								WW	Warm Diffuse w/ White Flange		
								CC	Custom Color		

DCDHX-MUD-FL	Flangeless Mud Plate *(Required with Flangeless Trim)*

[1] Only available in Emergency option
[2] Lutron LDE1 refers to Lutron Hi-lume 1% EcoSystem LED driver with Soft-on, Fade-to-Black™
[3] Only available for New Construction application
[4] Only available in White or Custom Color finish
[5] Only available in 1500 lm or 2000 lm
[6] Not available in Flangeless
[7] Requires Wide Flood optics
[8] Only available in Beveled style
[9] Requires DCDHX-MUD-FL Mud Plate

ADDITIONAL ACCESSORIES

DCD3X-NS	Narrow Spot Lens	DCD3X-FL	Flood Lens
DCD3X-SP	Spot Lens	DCD3X-WF	Wide Flood Lens

DMF LIGHTING 1118 E. 223rd St. Carson, CA 90745 323.934.7779 info@dmflighting.com dmflighting.com
© 2022 DMF Lighting. All Rights Reserved. Specifications subject to change without notice. See website for U.S. and international patent information.

MODULE

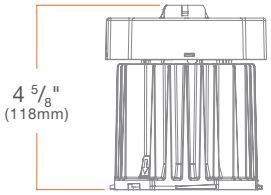

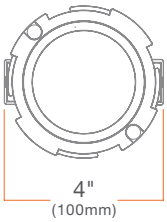

DCD3

Higher-Lumen Fixed Downlight

DCD3M

SUMMARY

LED CHIP: Cree

DELIVERED LUMENS: 1500 lm (20W), 2000 lm (28W), 2500 lm (37W), 3000 lm (40W)

EFFICACY: 86 lm/W, 79 lm/W, 72 lm/W, 82 lm/W

COLOR QUALITY: 90+ CRI, 2-step SDCM

CCT: 2700K, 3000K, 3500K, 4000K

BEAM SPREAD: Narrow Spot (15°), Spot (25°), Flood (40°), Wide Flood (60°)

CONNECTOR: Proprietary 6-pin, Molex AC connector

INPUT VOLTAGE: 120/277V, 50/60Hz

DIMMING: Down to less than 1% for 0-10V or Lutron EcoSystem

MAX INPUT CURRENT (120V): 0.35 amps

MAX INPUT CURRENT (277V): 0.15 amps

POWER FACTOR: Greater than 0.9

TOTAL HARMONIC DISTORTION: Less than 20%

AMBIENT OPERATING TEMPERATURE: -20°C to 40°C

PHOTOMETRIC TESTING: Tested in accordance to IESNA LM-79-2008

LISTINGS: ENERGY STAR® qualified *, California Title 24 2019 JA8 compliant, UL Listed for Wet Location (flanged trims only), UL Certified US·CA, Declare

LIFETIME: 50,000 hours at 70% lumen maintenance

WARRANTY: 5 year limited warranty

**Refer to ENERGY STAR Certified light fixtures database*

DMF LIGHTING 1118 E. 223rd St. Carson, CA 90745 323.934.7779 info@dmflighting.com dmflighting.com

© 2022 DMF Lighting. All Rights Reserved. Specifications subject to change without notice. See website for U.S. and international patent information.

HOUSING

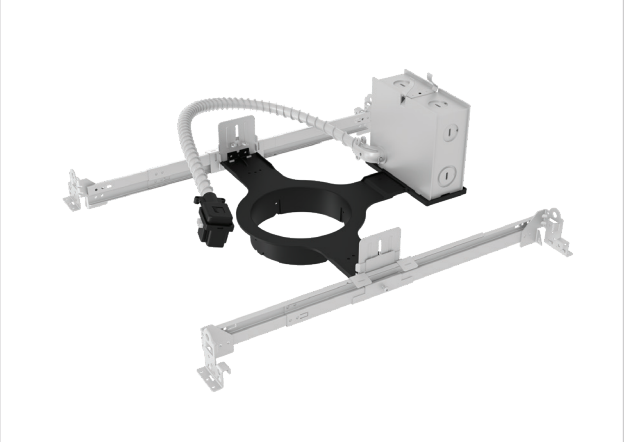

DCD Frame

New Construction, Remodel

DCDH

SUMMARY

JUNCTION BOX: Galvanized steel. Equipped with (4) 1/2" and (2) 3/4" knockouts with pryout slots to allow straight conduit runs. Approved for 8 (four-in, four-out) #12 AWG 70 through wire conductors.

MOUNTING: Pre-installed mounting brackets allow vertical adjustment of bar hangers up to 1" (New Construction). 4 tempered steel clamps secure housing to existing ceiling (Remodel).

CEILING: ½" up to 1 ¼"

CUTOUT: 4 ¾" (121mm) (New Construction), 5" (127mm) (Remodel) circular opening.

WARRANTY: 5 year limited warranty

© 2022 DMF Lighting. All Rights Reserved. Specifications subject to change without notice. See website for U.S. and international patent information.

New Construction, 0-10V

DCDHNR4

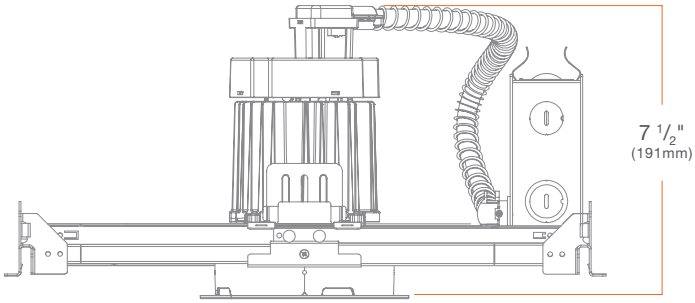

Note: Total height varies depending on trim. Beveled Trim shown.
Minimum height (Low Profile Trim): 5 7/8" (149mm).
Maximum height (Wall Wash Trim): 9 1/4" (235mm).

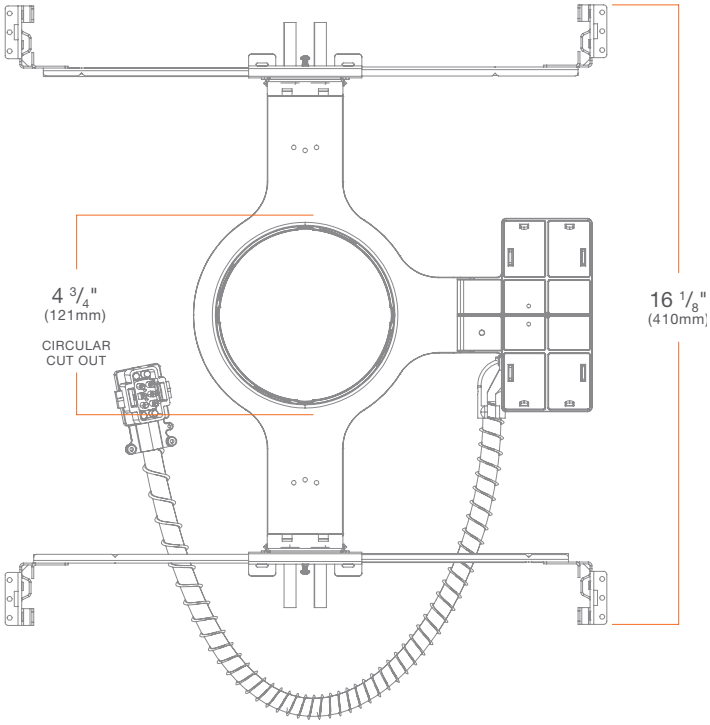

New Construction, EcoSytem or Emergency

DCDHNR4

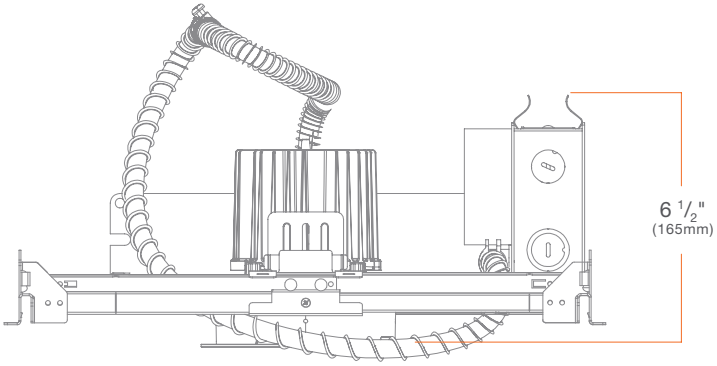

Note: Total height varies depending on trim. Beveled Trim shown.
Minimum height: 6 1/2" (165mm).
Maximum height (Wall Wash Trim): 7 1/2" (191mm).

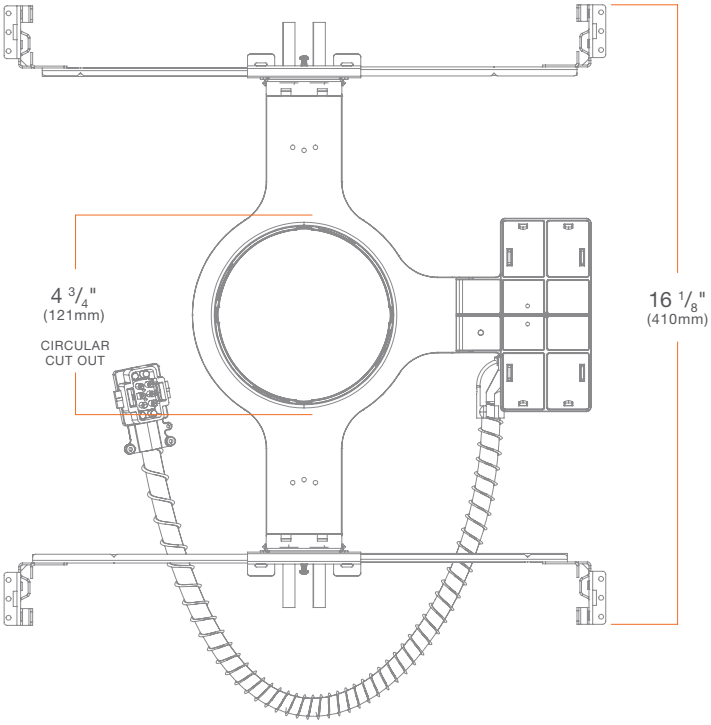

© 2022 DMF Lighting. All Rights Reserved. Specifications subject to change without notice. See website for U.S. and international patent information.

Remodel, 0-10V

DCDHRR4

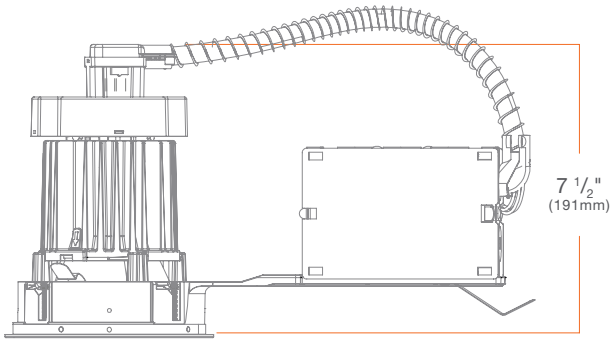

Note: Total height varies depending on trim. Beveled Trim shown.
Minimum height (Low Profile Trim): 5 7/8" (149mm).
Maximum height (Wall Wash Trim): 9 1/4" (235mm).

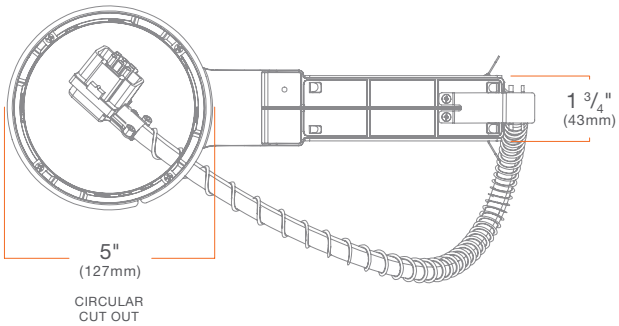

Remodel, EcoSytem or Emergency

DCDHRR4

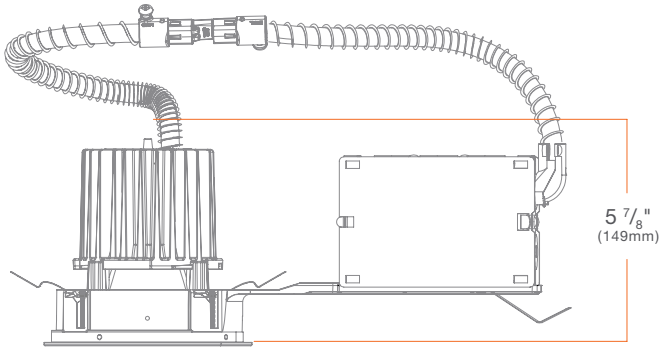

Note: Total height varies depending on trim. Beveled Trim shown.
Minimum height (Low Profile Trim): 5 1/4" (133mm).
Maximum height (Wall Wash Trim): 7 1/2" (191mm).

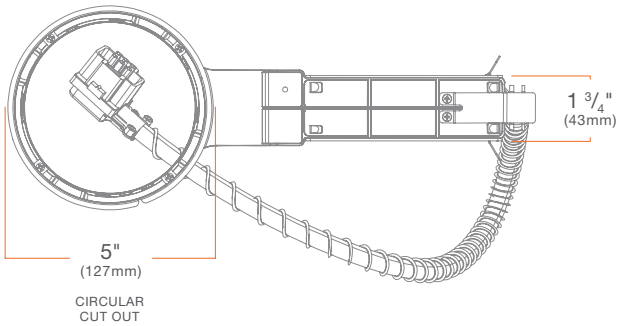

© 2022 DMF Lighting. All Rights Reserved. Specifications subject to change without notice. See website for U.S. and international patent information.

TRIM

DCD3 Trims

Recessed LED Downlight Trims

DCD3T

SUMMARY

CONSTRUCTION: Die-cast aluminum

INSTALLATION: Twist & Lock (flanged trims only)

Beveled

DCD3TR4SWH

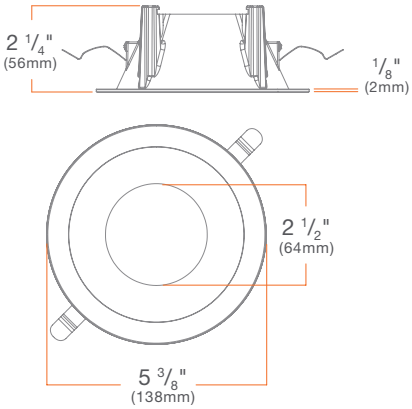

Hyperbolic

DCD3TR4HWH

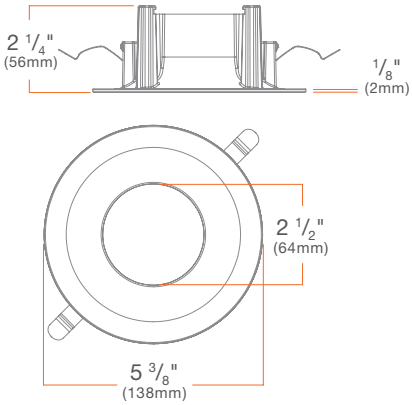

Pinhole

DCD3TR4PWH

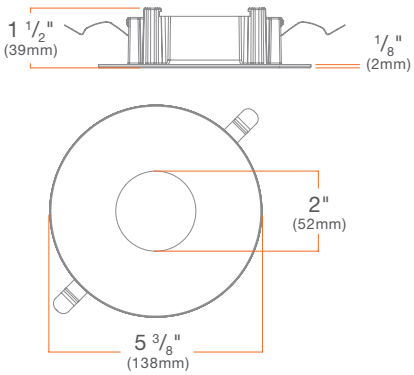

Low Profile

DCD3TR4LWH

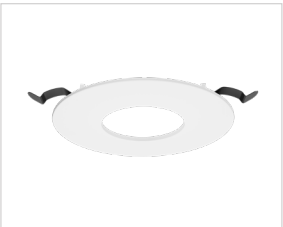

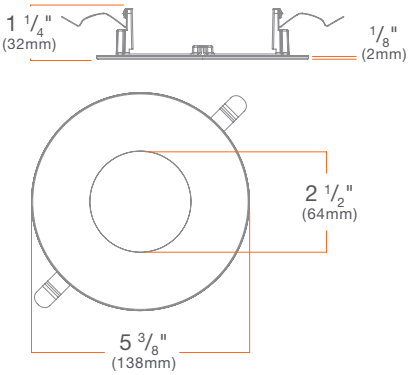

DMF LIGHTING 1118 E. 223rd St. Carson, CA 90745 323.934.7779 info@dmflighting.com dmflighting.com

© 2022 DMF Lighting. All Rights Reserved. Specifications subject to change without notice. See website for U.S. and international patent information.

Wall Wash

DCD3TR4WWH

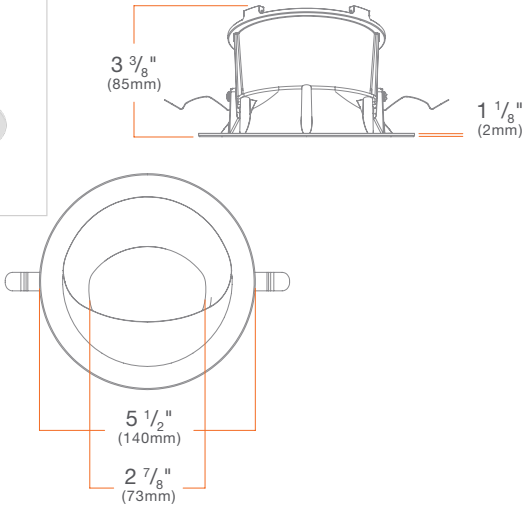

Decorative

DCD3TR4SWHDOF

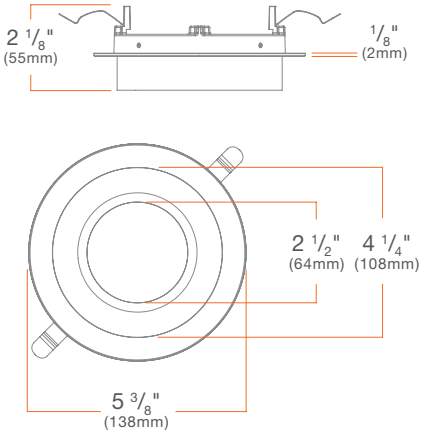

Round Flangeless Trim Insert

DCD3TR4SWHFL

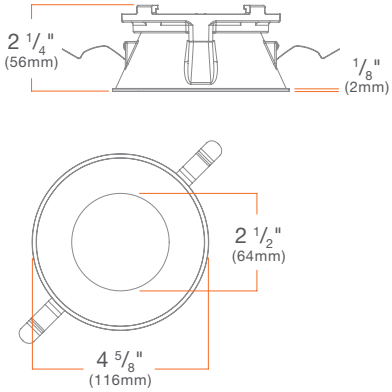

Hyperbolic Flangeless Trim Insert

DCD3TR4HWHFL

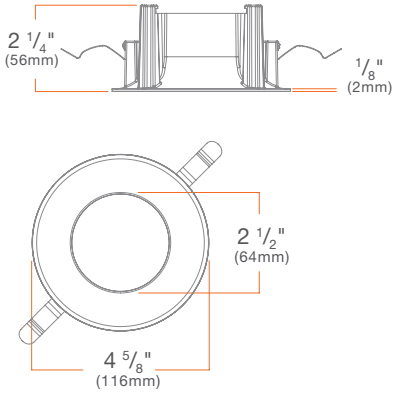

Pinhole Flangeless Trim Insert

DCD3TR4PWHFL

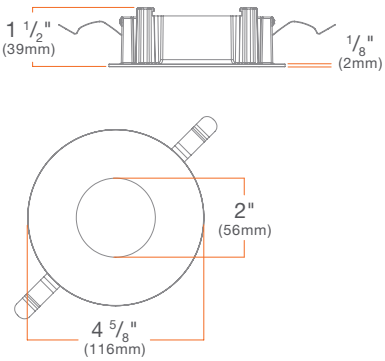

Wall Wash Flangeless Trim Insert

DCD3TR4WWHFL

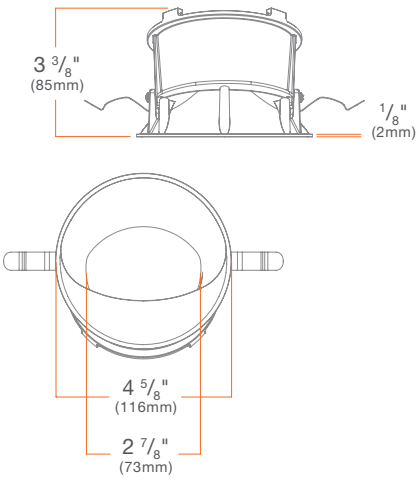

© 2022 DMF Lighting. All Rights Reserved. Specifications subject to change without notice. See website for U.S. and international patent information.

PHOTOMETRY

DCD3 2000 lm, 3500K, Narrow Spot

DCD3M20935NS

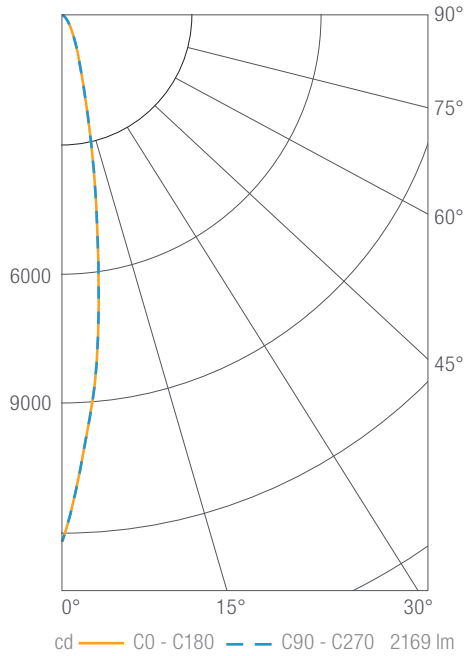

Luminous Intensity

Gamma	C 0°
0º	11621
5º	7961
10º	4148
15º	2145
20º	1136
25º	714
30º	440
35º	293
40º	212
45º	161
50º	125
55º	88
60º	74
65º	51
70º	39
75º	18
80º	8
85º	2
90º	0

Values in candela

Zonal Lumen Summary

Zone	Lumens	Luminaire %
0-30	1678	77
0-40	1875	86
0-60	2085	96
0-90	2169	100
0-180	2169	100

Illuminance Chart

Distance from LED	Foot Candles	Diameter
3'	1360	0.7'
6'	340	1.5'
9'	151	2.2'
12'	85	2.9'

Beam Angle: 15°

DCD3 2000 lm, 3500K, Spot

DCD3M20935SP

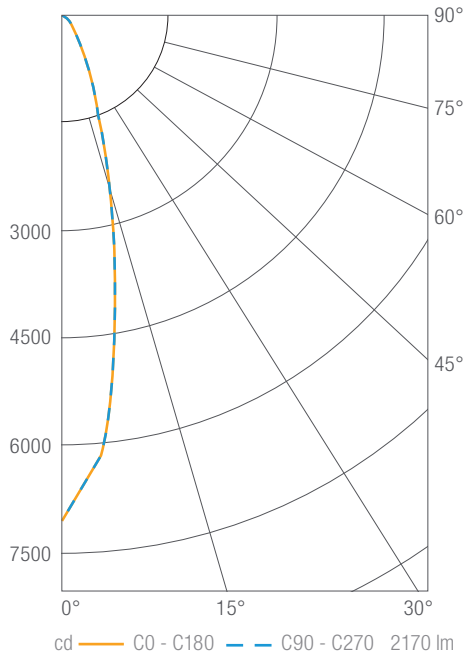

Luminous Intensity

Gamma	C 0°
0º	6824
5º	5842
10º	4001
15º	2339
20º	1302
25º	785
30º	496
35º	340
40º	238
45º	174
50º	128
55º	100
60º	77
65º	60
70º	40
75º	23
80º	8
85º	3
90º	0

Values in candela

Zonal Lumen Summary

Zone	Lumens	Luminaire %
0-30	1606	74
0-40	1837	85
0-60	2078	96
0-90	2170	100
0-180	2170	100

Illuminance Chart

Distance from LED	Foot Candles	Diameter
3'	783	1.2'
6'	196	2.3'
9'	87	3.5'
12'	49	4.7'

Beam Angle: 24°

© 2022 DMF Lighting. All Rights Reserved. Specifications subject to change without notice. See website for U.S. and international patent information.

PHOTOMETRY

DCD3 2000 lm, 3500K, Flood

DCD3M20935FL

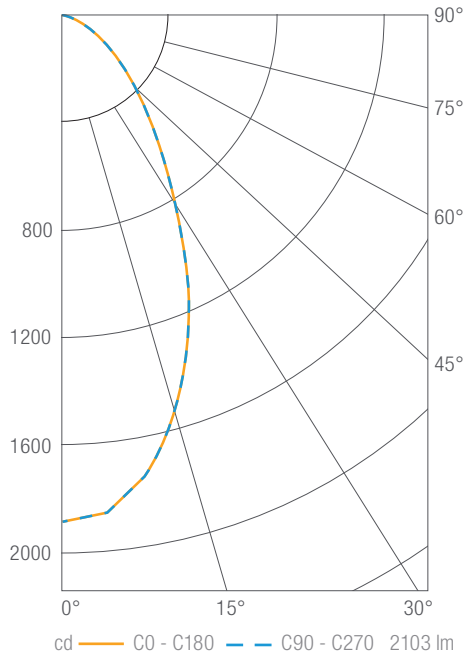

Luminous Intensity

Gamma	C 0°
0°	1879
5°	1802
10°	1664
15°	1462
20°	1230
25°	1001
30°	779
35°	606
40°	464
45°	344
50°	248
55°	189
60°	130
65°	96
70°	66
75°	38
80°	21
85°	3
90°	0

Values in candela

Zonal Lumen Summary

Zone	Lumens	Luminaire %
0-30	1067	51
0-40	1466	70
0-60	1933	92
0-90	2103	100
0-180	2103	100

Illuminance Chart

Distance from LED	Foot Candles	Diameter
3'	209	2.9'
6'	52	5.9'
9'	23	8.8'
12'	13	11.7'

Beam Angle: 54°

DCD3 2000 lm, 3500K, Wide Flood

DCD3M20935WF

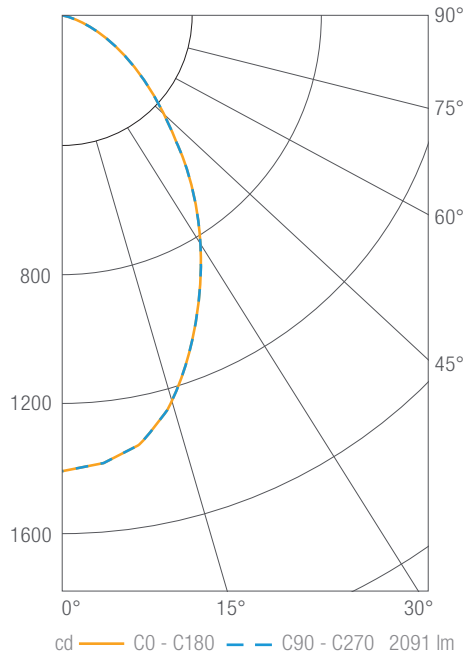

Luminous Intensity

Gamma	C 0°
0°	1426
5°	1379
10°	1304
15°	1192
20°	1053
25°	919
30°	796
35°	665
40°	537
45°	417
50°	314
55°	231
60°	163
65°	116
70°	79
75°	50
80°	26
85°	6
90°	2

Values in candela

Zonal Lumen Summary

Zone	Lumens	Luminaire %
0-30	911	44
0-40	1340	64
0-60	1898	91
0-90	2092	100
0-180	2092	100

Illuminance Chart

Distance from LED	Foot Candles	Diameter
3'	157	0.3'
6'	39	8.6'
9'	17	12.9'
12'	10	17.2'

Beam Angle: 68°

© 2022 DMF Lighting. All Rights Reserved. Specifications subject to change without notice. See website for U.S. and international patent information.

PHOTOMETRY

Lumen Scaling

DCD3M15 (1500 lm)	**DCD3M20** (2000 lm)	**DCD3M25** (2500 lm)	**DCD3M30** (3000 lm)
0.75	1.00	1.25	1.50

CCT Scaling

DCD3M20927 (2700K)	**DCD3M20930** (3000K)	**DCD3M20935** (3500K)	**DCD3M20940** (4000K)
0.91	0.96	1.00	1.03

DIMMER COMPATIBILITY

Recommended 0-10V Dimmers (Dims down to 1% nominal measured light output)

Brand	Series	Model Number	Max Load
Cooper	Decorator	DAL06P, DLC03P	20
	Slide	SLC03P	20
Leviton	Sure Slide	6621, 6631	10
Lutron	Diva CL	DVCL-153P	10
	Diva CL	DVCL-253P	15
	Grafik	GTJ-150-WH	10
	Maestro	MRF2-6ND	10
	Maestro CL	MACL-153	10
	Maestro CL	MA-PRO-WH	15
	Maestro CL	MACL-153M, MSCL-OP153M, MSCL-VP153M	10
	Radio RA	RRD-6NA, RRD-6ND	10
	Skylark	SELV-300P	20

DMF LIGHTING 1118 E. 223rd St. Carson, CA 90745 323.934.7779 info@dmflighting.com dmflighting.com
© 2022 DMF Lighting. All Rights Reserved. Specifications subject to change without notice. See website for U.S. and international patent information.